CONNECTION DIAGRAM

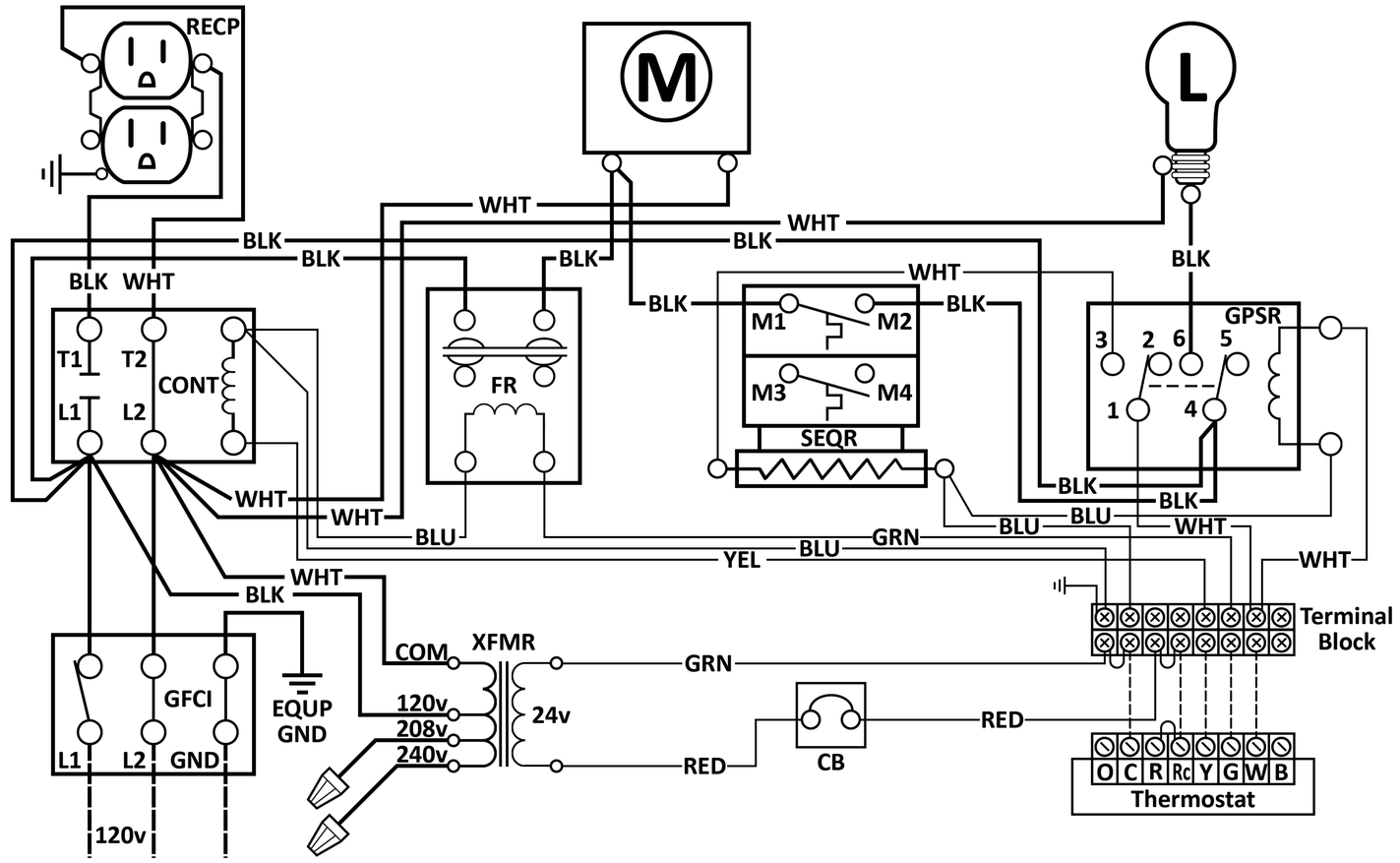

SCHEMATIC DIAGRAM

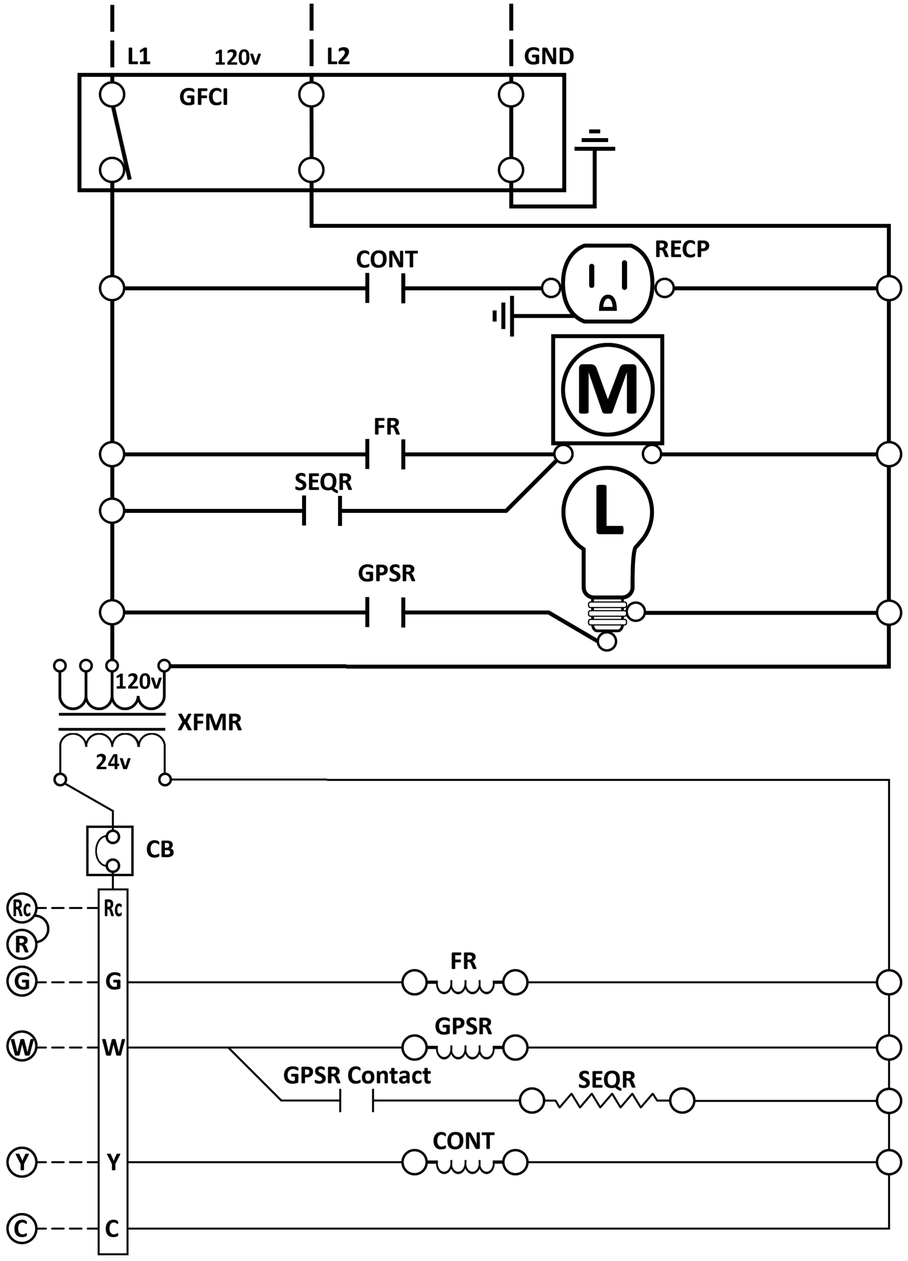

LEGEND

FACTORY POWER WIRING	
FACTORY CONTROL WIRING	
FIELD POWER WIRING, 120v	
FIELD CONTROL WIRING, 24v	
COMPONENT CONNECTION	
GROUND CONNECTION	
LIGHT	

CONT	CONTACTOR
FR	FAN RELAY
GFCI	GROUND-FAULT CIRCUIT INTERRUPTER
GPSR	GENERAL PURPOSE SWITCHING RELAY
RECP	RECEPTACLE
SEQR	SEQUENCER
XFMR	MULTI-TAP TRANSFORMER
	WIRE NUT

	CB, CIRCUIT BREAKER, 3 amp
	COIL
	CLOSE ON TEMP RISE
	NORMALY OPEN CONTACTS, N.O.
	RESISTOR
	SHADED POLE MOTOR